Product number: A2126-33

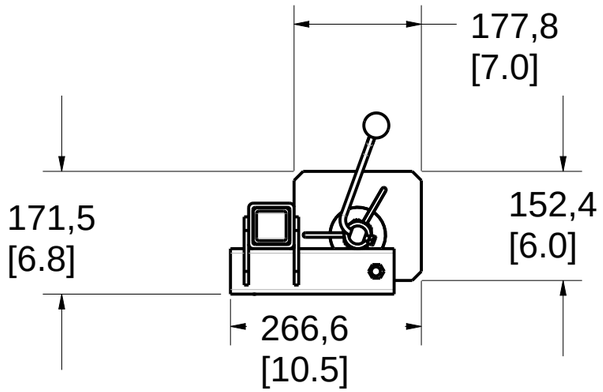

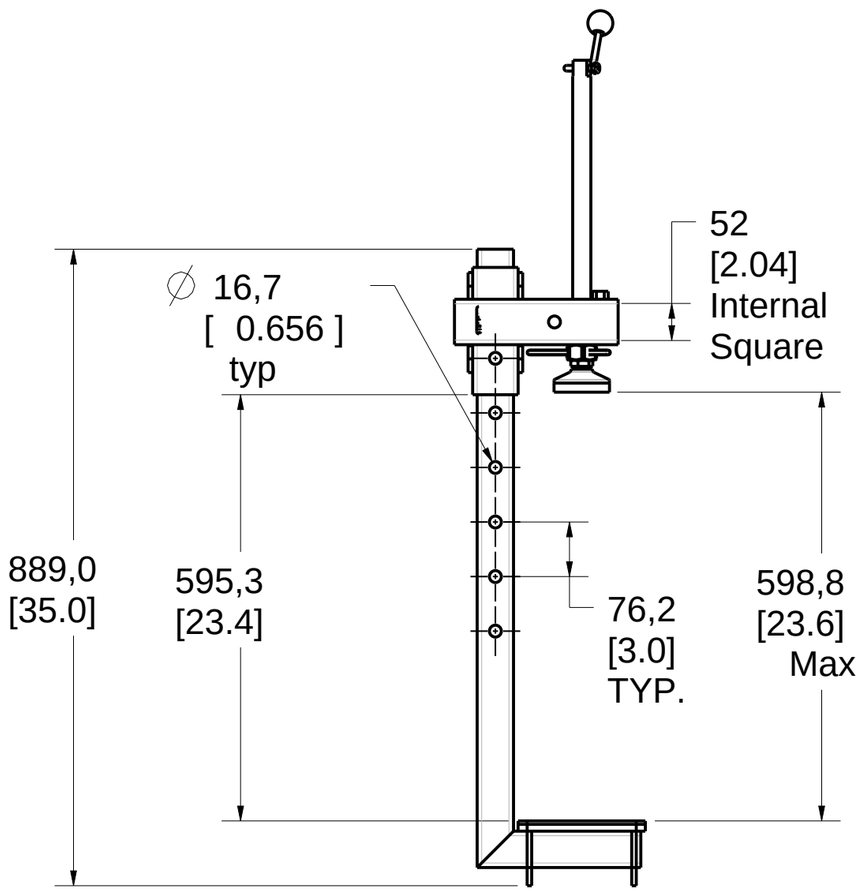

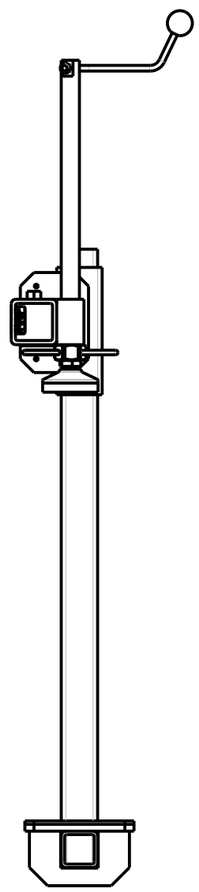

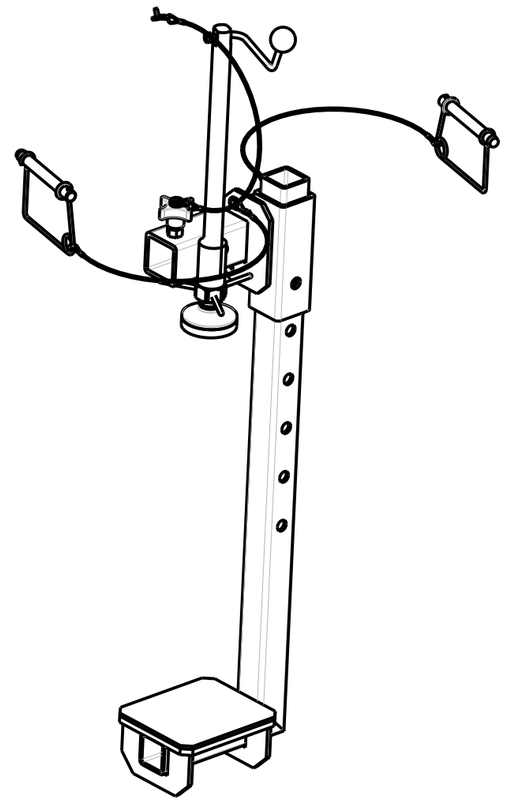

PAT. NO.:	©16/06/2011	©	

PRODUITS DE SERVICE PUBLICS INNOVA INC.
INNOVA PUBLIC UTILITY PRODUCTS INC.

© 9105-0732 QUEBEC INC. and under exclusive license to INNOVA PUBLIC UTILITY PRODUCTS INC., (hereafter « INNOVA »). All rights reserved. Protected under the Copyright Act of Canada and international treaties and agreements regarding copyrights. Violators are subject to prosecution and other legal recourses for infringement. Any reproduction, adaptation or other use or disclosure whatsoever, in totality or in part, and in any form or by any means whatsoever, strictly forbidden and requires the prior written approval of INNOVA. All data is the exclusive property of 9105-0732 QUEBEC INC. and under exclusive license to INNOVA and cannot be used nor disclosed in any way either without the prior written approval of INNOVA».

WEIGHT:	TITLE:		
41 Lb 19 Kg	C-Clamp adapter for hitch mount (long)		
COLOR: Zinc plated	MATERIAL: Steel	SHEET(S): 1 / 4	PROJECT: A2126-33

Product number: A2126-33

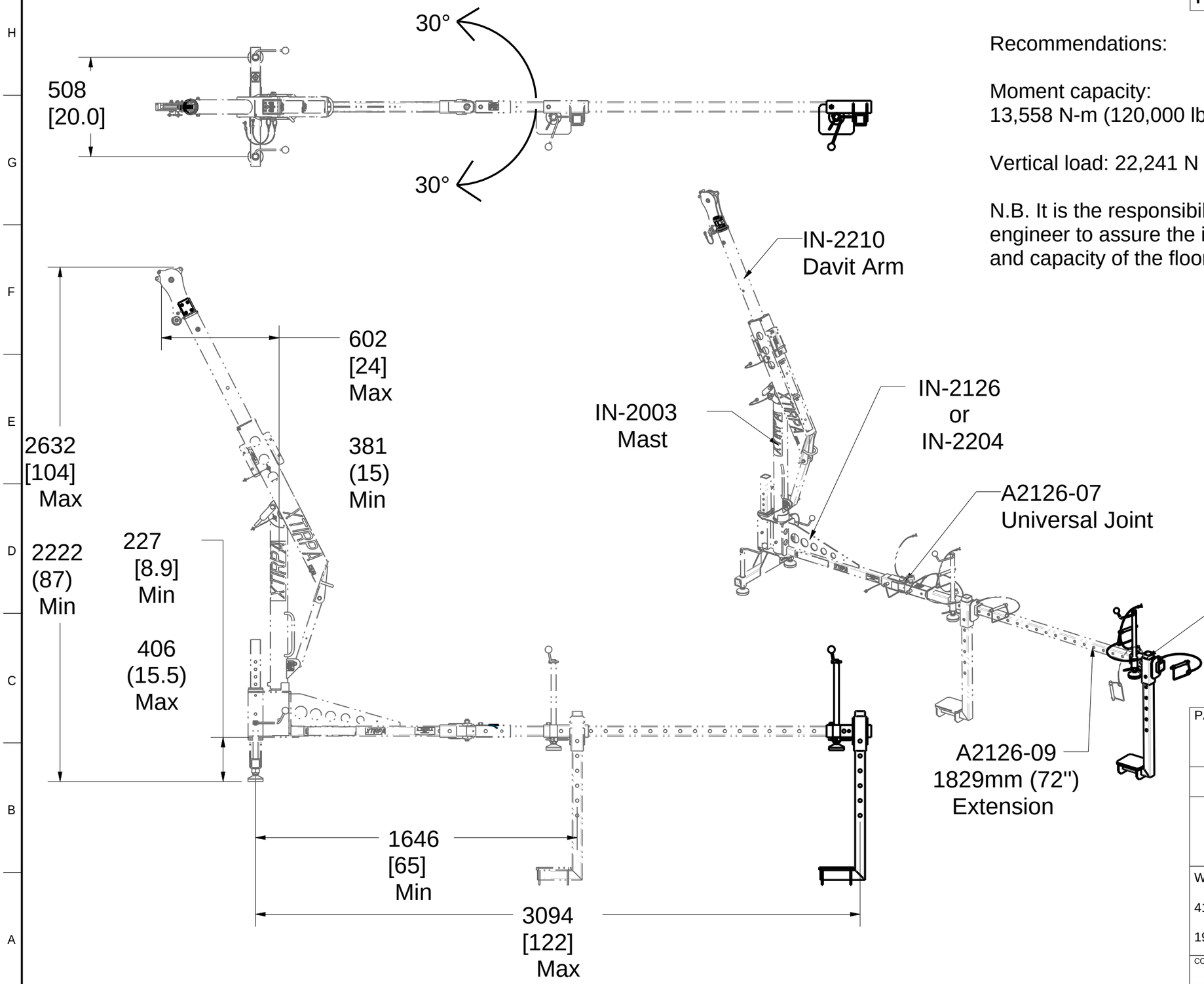

Recommendations:

Moment capacity:
13,558 N-m (120,000 lbf-in)

Vertical load: 22,241 N (5,000 lbf)

N.B. It is the responsibility of the field engineer to assure the installation and capacity of the floor and wall structures.

PAT. NO.:	©16/06/2011	©

PRODUITS DE SERVICE PUBLICS INNOVA INC.
INNOVA PUBLIC UTILITY PRODUCTS INC.

© 9105-0732 QUEBEC INC. and under exclusive license to INNOVA PUBLIC UTILITY PRODUCTS INC., (hereafter « INNOVA »). All rights reserved. Protected under the Copyright Act of Canada and international treaties and agreements regarding copyrights. Violators are subject to prosecution and other legal recourses for infringement. Any reproduction, adaptation or other use or disclosure whatsoever, in totality or in part, and in any form or by any means whatsoever, strictly forbidden and requires the prior written approval of INNOVA. All data is the exclusive property of 9105-0732 QUEBEC INC. and under exclusive license to INNOVA and cannot be used nor disclosed in any way either without the prior written approval of INNOVA».

WEIGHT:	TITLE:		
41 Lb 19 Kg	C-Clamp adapter for hitch mount (long)		
COLOR: Zinc plated	MATERIAL: Steel	SHEET(S): 2 / 4	PROJECT: A2126-33

Product number: A2126-33

SPECIFICATIONS

This equipment is considered as part of a personal fall arrest system (PFAS).

It is only to be used in conjunction with a personal fall arrest system that limits the maximum arrest force (MAF).

Working load limit (WLL): 1,112 N (250 lbf)
Max design capacity: 11,121 N (2,500 lbf)

Note: The stucture must meet the maximum design capacity.

STANDARDS

Meets the following standards:
OSHA Personal fall arrest system - 1910.66 App C
ANSI Safety requirements for personal fall arrest system, subsystems and components Z359.1 (R1999) / 2007
CAN/CSA Fall arresters, vertical lifelines, and rails Z259.2.1-98
CE EN 795: 2012 Type B

MATERIAL AND CONSTRUCTION

Body and guide: Zinc plated steel
Hardware : Zinc plated steel and stainless steel
Counter Plate : Steel Rubber-Coated
Finish : Clear Zinc plated, ASTM B-633-11, Type V, SC3.
Welding certification : CSA W59 & 47.1

RESTRICTIONS

This product is to be used only with products approved by Innova Public Utility Products inc.

**The positioning pins must always be in place when manoeuvering personnel. Otherwise, serious injuries may occur.

Periodic inspections of hardware must be done.
In the occurrence of a fall or the safety of the equipment is in doubt, equipment must be immediately removed from service and inspected by qualified personnel before reuse.

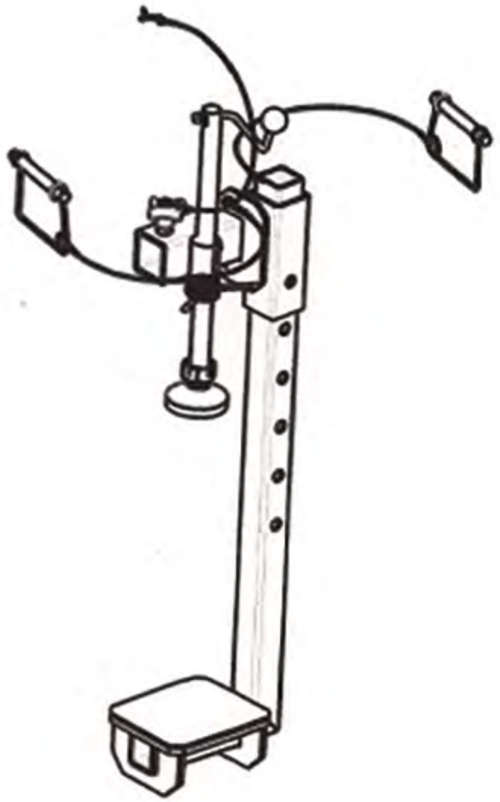

INGÉNIEUR · ENGINEER
Michael Parker
29/02/16
102051
QUÉBEC
Stamping space

PAT. NO.:	016/06/2011	0

PRODUCTS DE SERVICE PUBLICS INNOVA INC.
INNOVA PUBLIC UTILITY PRODUCTS INC.

© 9105-0132 QUEBEC INC. and under exclusive license to INNOVA PUBLIC UTILITY PRODUCTS INC., (hereafter « INNOVA »). All rights reserved. Protected under the Copyright Act of Canada and international treaties and agreements regarding copyrights. Violators are liable not to prosecution and either legal recourses for infringement. Any reproduction, adaptation or other use of this drawing whatsoever, in totality or in part, and in any form or by any means whatsoever, strictly forbidden and requires the prior written approval of INNOVA. All data is the exclusive property of 9105-0132 QUEBEC INC. and under exclusive license to INNOVA and cannot be used nor disclosed in any way or other without the prior written approval of INNOVA.

WEIGHT:	TITLE:		
41 Lb 19 Kg	C-Clamp adapter for hitch mount (long)		
COLOR: Zinc plated	MATERIAL: Steel	SHEETS: 3 / 4	PROJECT: A2126-33

Product number: A2126-33

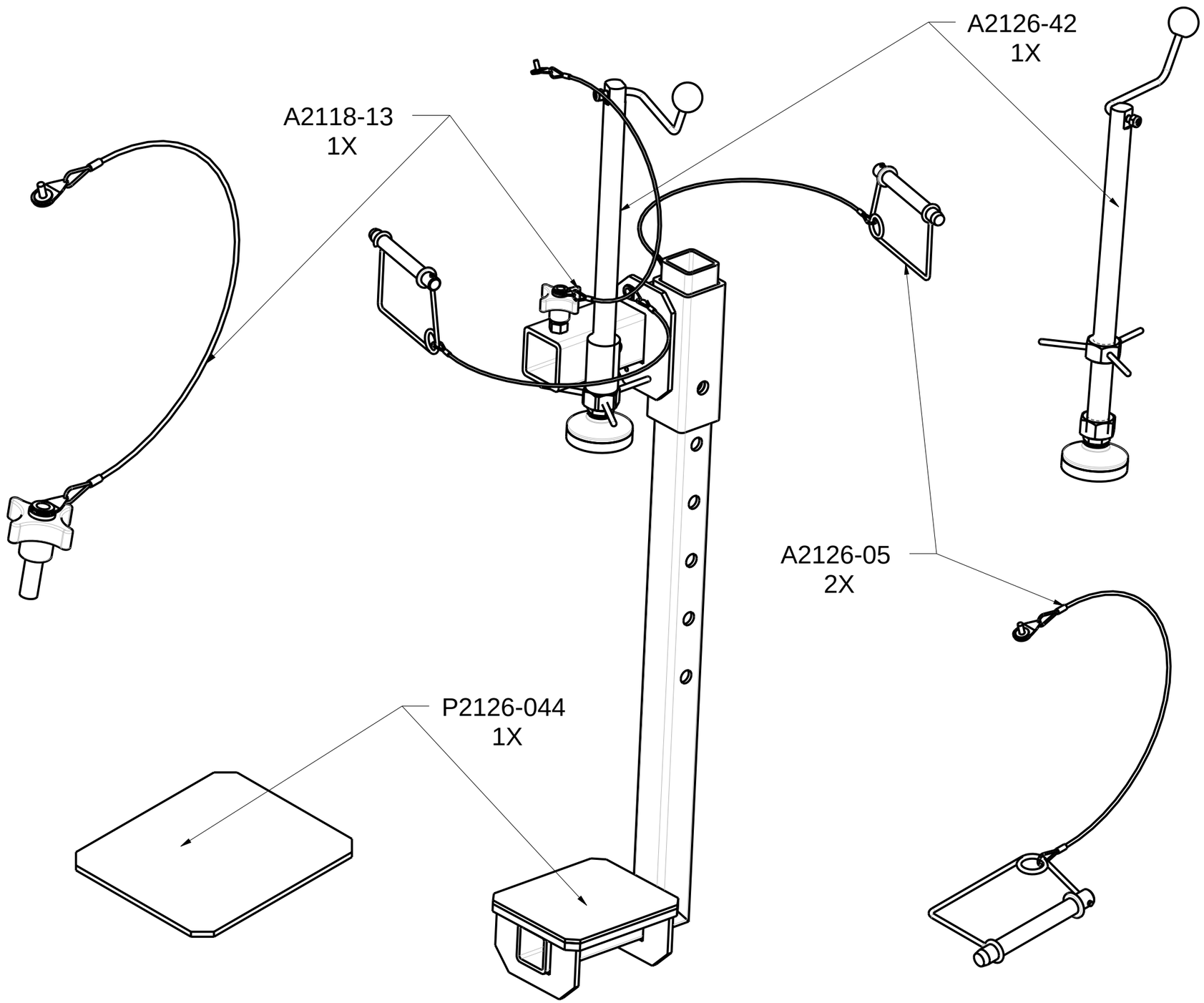

PAT. NO.:	©16/06/2011	©

PRODUITS DE SERVICE PUBLICS INNOVA INC.
INNOVA PUBLIC UTILITY PRODUCTS INC.

© 9105-0732 QUEBEC INC. and under exclusive license to INNOVA PUBLIC UTILITY PRODUCTS INC., (hereafter « INNOVA »). All rights reserved. Protected under the Copyright Act of Canada and international treaties and agreements regarding copyrights. Violators are subject to prosecution and other legal recourses for infringement. Any reproduction, adaptation or other use or disclosure whatsoever, in totality or in part, and in any form or by any means whatsoever, strictly forbidden and requires the prior written approval of INNOVA. All data is the exclusive property of 9105-0732 QUEBEC INC. and under exclusive license to INNOVA and cannot be used nor disclosed in any way either without the prior written approval of INNOVA».

WEIGHT:	TITLE:		
41 Lb 19 Kg	C-Clamp adapter for hitch mount (long)		
COLOR: Zinc plated	MATERIAL: Steel	SHEET(S): 4 / 4	PROJECT: A2126-33