Product number: IN-2097

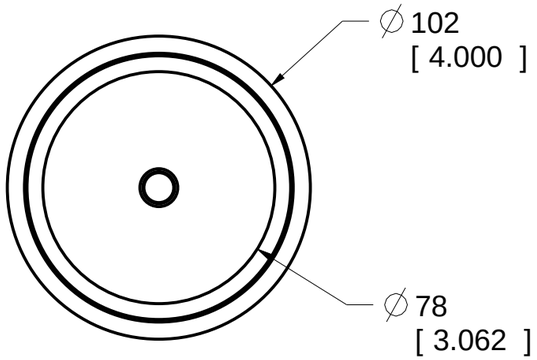

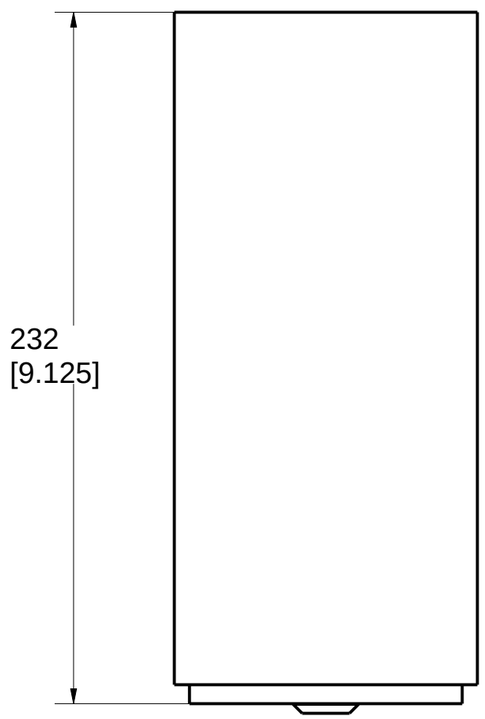

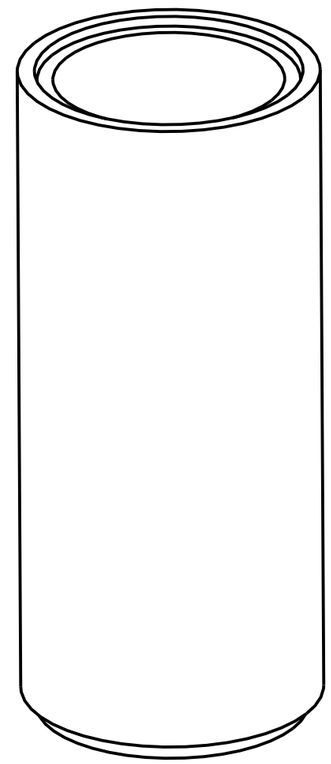

PAT. NO.:	©2007/01/23	©

PRODUITS DE SERVICE PUBLICS INNOVA INC.
INNOVA PUBLIC UTILITY PRODUCTS INC.

© 9105-0732 QUEBEC INC. and under exclusive license to INNOVA PUBLIC UTILITY PRODUCTS INC., (hereafter « INNOVA »). All rights reserved. Protected under the Copyright Act of Canada and international treaties and agreements regarding copyrights. Violators are subject to prosecution and other legal recourses for infringement. Any reproduction, adaptation or other use or disclosure whatsoever, in totality or in part, and in any form or by any means whatsoever, strictly forbidden and requires the prior written approval of INNOVA. All data is the exclusive property of 9105-0732 QUEBEC INC. and under exclusive license to INNOVA and cannot be used nor disclosed in any way either without the prior written approval of INNOVA».

WEIGHT: 9 Lb 4 Kg	TITLE: 76mm (3") Sleeve Adapter (SS 304)		
COLOR:	MATERIAL: SS 304	SHEET(S): 1 / 4	PROJECT: IN-2097

Product number: IN-2097

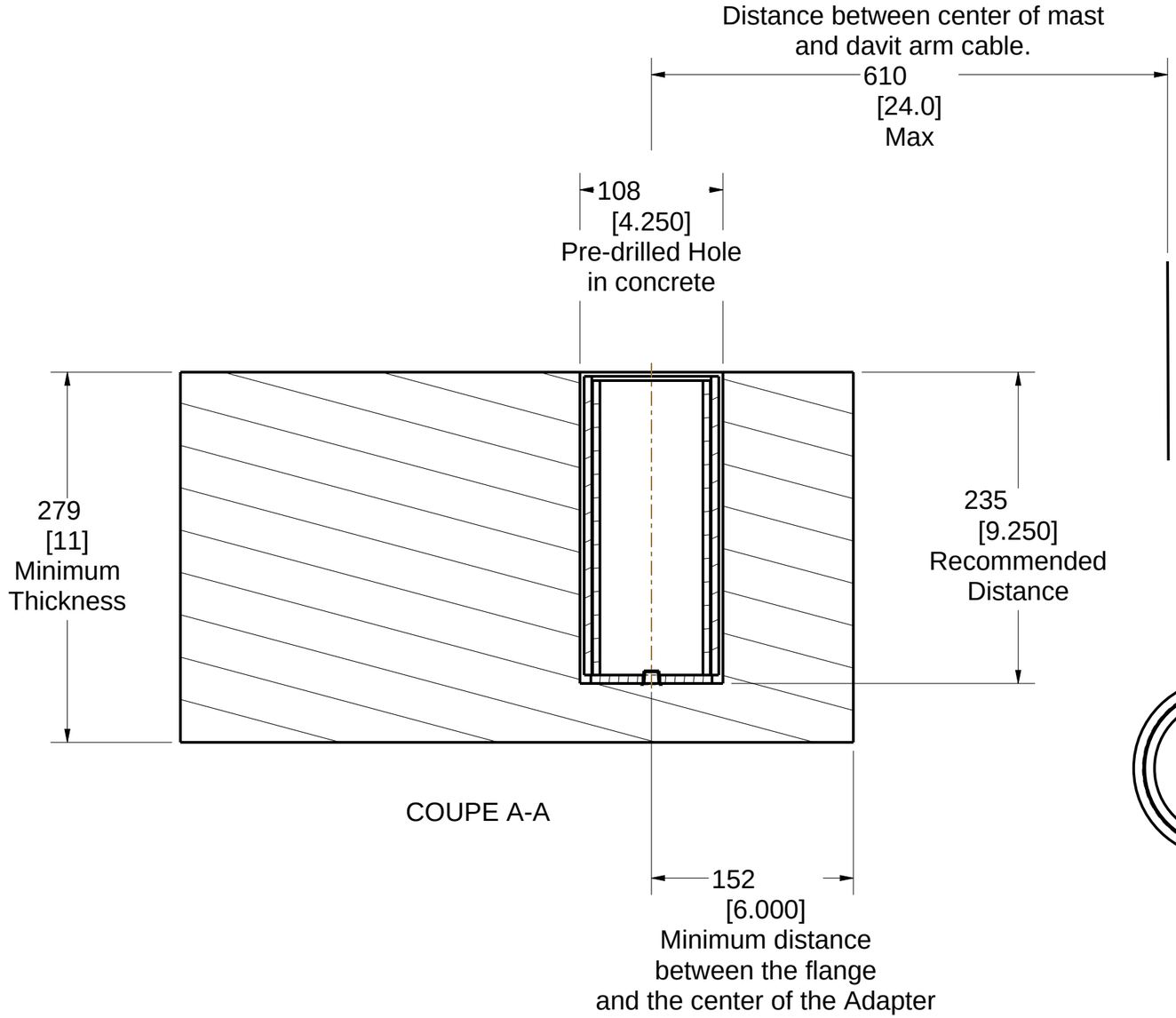

Recommandations:

Concrete must be made of 0,2% gross area rebar reinforced 13.8 MPa (2000psi) or better.
Minimum thickness of 280mm (11").

Important:
Use anchor bolt epoxy (such as Hilti Hit-RE-500) as a filler between the sleeve adaptor and concrete.

Moment capacity:
13,558 N-m (120,000 lbf-in)
Vertical load: 22,241 N (5,000 lbf).
N.B. It is the responsibility of the field Engineer to assure the installation and capacity of the floor and wall structures.

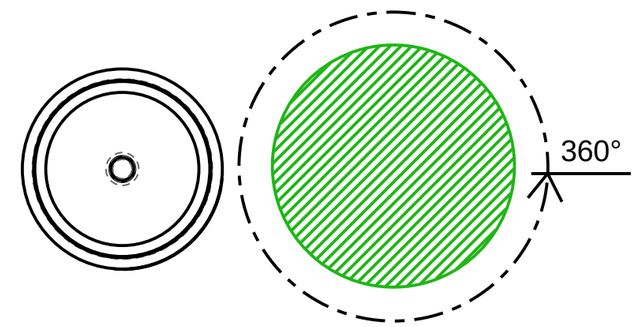

Allowable Working Angle

PAT. NO.:	©2007/01/23	©	

PRODUITS DE SERVICE PUBLICS INNOVA INC.
INNOVA PUBLIC UTILITY PRODUCTS INC.

© 9105-0732 QUEBEC INC. and under exclusive license to INNOVA PUBLIC UTILITY PRODUCTS INC., (hereafter « INNOVA »). All rights reserved. Protected under the Copyright Act of Canada and international treaties and agreements regarding copyrights. Violators are subject to prosecution and other legal recourses for infringement. Any reproduction, adaptation or other use or disclosure whatsoever, in totality or in part, and in any form or by any means whatsoever, strictly forbidden and requires the prior written approval of INNOVA. All data is the exclusive property of 9105-0732 QUEBEC INC. and under exclusive license to INNOVA and cannot be used nor disclosed in any way either without the prior written approval of INNOVA».

WEIGHT: 9 Lb 4 Kg	TITLE: 76mm (3") Sleeve Adapter (SS 304)		
COLOR:	MATERIAL: SS 304	SHEET(S): 2 / 4	PROJECT: IN-2097

Product number: IN-2097

SPECIFICATIONS

This equipment is considered as part of a personal fall arrest system (PFAS) with a maximum working capacity of 164 Kg (360 lb).

It is only to be used in conjunction with a personal fall arrest system that limits the maximum arrest force (MAF).

Maximum Working Moment:976 N-m (8,640 lbf-in)
Maximum Moment:13,558 N-m (120,000 lbf-in)

STANDARDS

Meets the following standards:
OSHA Personal fall arrest system - 1910.66 App C
ANSI Safety requirements for personal fall arrest system, subsystems and components Z359.1 / 2007
CAN/CSA Fall arresters, vertical lifelines, and rails Z259.2.1-98
CE EN 795:2012 Type A

MATERIAL AND CONSTRUCTION

Plate and sleeve : 304 Stainless Steel
Sleeve bearing : PVC Pipe.
Welding Certification : CSA W59 & W47.1, AWS D1.6

RESTRICTIONS

IMPORTANT :

This adapter is to be used only with products approved by Innova Public Utility Products Inc.

If necessary Anchor hardware must be installed by qualified and experienced personnel.
The installer must follow the anchor hardware manufacturer's recommendations at all times.

**The positioning pins must always be in place when manoeuvering personnel. Otherwise, serious injuries may occur.

Periodic inspections of hardware must be done.
In the occurrence of a fall or the safety of the equipment is in doubt, equipment must be immediately removed from service and inspected by qualified personnel before reuse.

** This equipment must always be operated in a level position.

** Always use a protection adapter cap when adapter is used outside and/or when possible freezing can occur.

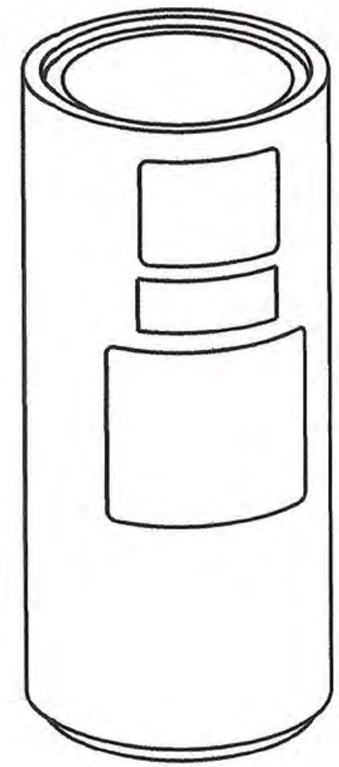

INGÉNIEUR · ENGINEER
Michael Parker
29/06/16
102051
QUÉBEC

Stamping space

PAT. NO.:	©2007/01/23	©

PRODUITS DE SERVICE PUBLICS INNOVA INC.
INNOVA PUBLIC UTILITY PRODUCTS INC.

© 9105-0732 QUEBEC INC. and under exclusive license to INNOVA PUBLIC UTILITY PRODUCTS INC., (hereafter « INNOVA »). All rights reserved. Protected under the Copyright Act of Canada and international treaties and agreements regarding copyrights. Violators are subject to prosecution and other legal recourses for infringement. Any reproduction, adaptation or other use or disclosure whatsoever, in totality or in part, and in any form or by any means whatsoever, strictly forbidden and requires the prior written approval of INNOVA. All data is the exclusive property of 9105-0732 QUEBEC INC. and under exclusive license to INNOVA and cannot be used nor disclosed in any way either without the prior written approval of INNOVA».

WEIGHT:	TITLE:		
9 Lb 4 Kg	76mm (3") Sleeve Adapter (SS 304)		
COLOR:	MATERIAL: SS 304	SHEET(S): 3 / 4	PROJECT: IN-2097

Product number: IN-2097

IDX	QTE	COMPONENT	REV	DESCRIPTION	MATERIAL
3	1	S2337-003	REV C	Security Label Type A	
2	1	S2001-005	RevB	Label XTIRPA serial number	
1	1	S2006-001		All adapter Universal Sticker	

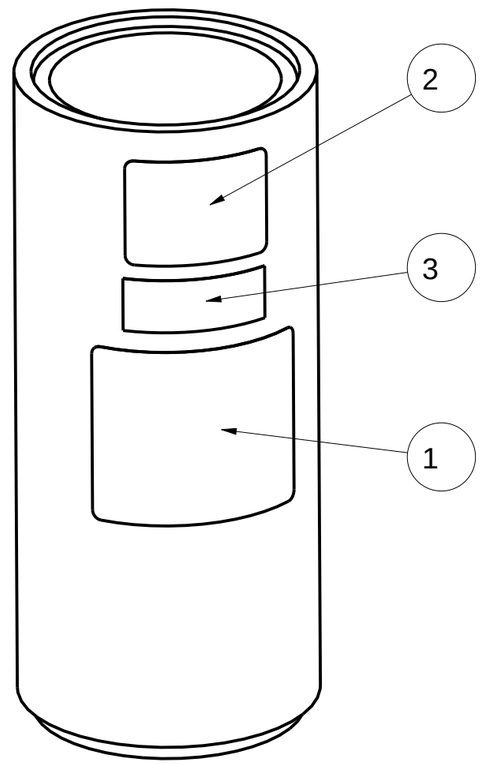

PAT. NO.:

©2007/01/23 ©

PRODUITS DE SERVICE PUBLICS INNOVA INC.
INNOVA PUBLIC UTILITY PRODUCTS INC.

© 9105-0732 QUEBEC INC. and under exclusive license to INNOVA PUBLIC UTILITY PRODUCTS INC., (hereafter « INNOVA »). All rights reserved. Protected under the Copyright Act of Canada and international treaties and agreements regarding copyrights. Violators are subject to prosecution and other legal recourses for infringement. Any reproduction, adaptation or other use or disclosure whatsoever, in totality or in part, and in any form or by any means whatsoever, strictly forbidden and requires the prior written approval of INNOVA. All data is the exclusive property of 9105-0732 QUEBEC INC. and under exclusive license to INNOVA and cannot be used nor disclosed in any way either without the prior written approval of INNOVA».

WEIGHT:

9 Lb

4 Kg

TITLE:

76mm (3") Sleeve Adapter

(SS 304)

COLOR:	MATERIAL:	SHEET(S):	PROJECT:
	SS 304	4 / 4	IN-2097